SONY

4-411-997-**11**(1)

LCD TV

Operating Instructions

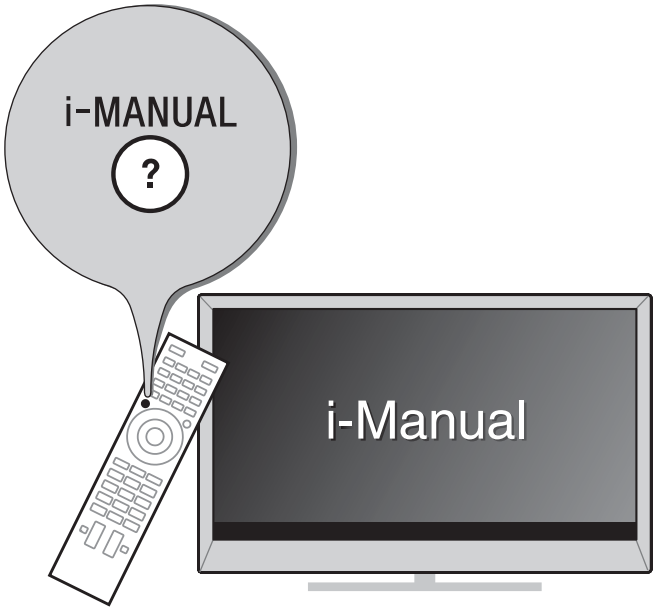

BRAVIA

KDL-55HX85x / 46HX85x / 40HX85x

NOTICE FOR CUSTOMERS IN THE UNITED KINGDOM

A moulded plug complying with BS1363 is fitted to this equipment for your safety and convenience.

Should the fuse in the plug supplied need to be replaced with the same rating of fuse approved by ASTA or BSI to BS 1362 (i.e., marked with ⟐ or ♡) must be used.

If the plug supplied with this equipment has a detachable fuse cover, be sure to attach the fuse cover after you change the fuse. Never use the plug without the fuse cover. If you should lose the fuse cover, please contact your nearest Sony service station.

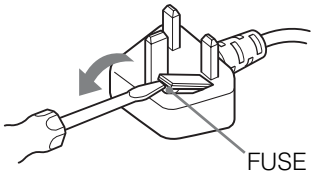

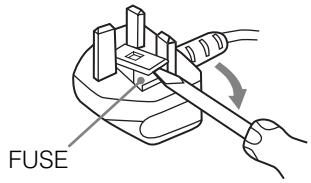

How to replace the fuse

Open the fuse compartment with a blade screwdriver, and replace the fuse.
Please refer to the illustration that actually equipped with the product.

Introduction

Thank you for choosing this Sony product. Before operating the TV, please read this manual thoroughly and retain it for future reference.

> The manufacturer of this product is Sony Corporation, 1-7-1 Konan Minato-ku Tokyo, 108-0075 Japan. The Authorized Representative for EMC and product safety is Sony Deutschland GmbH, Hedelfinger Strasse 61, 70327 Stuttgart, Germany. For any service or guarantee matters please refer to the addresses given in separate service or guarantee documents.

Notes on Digital TV function

- Any functions related to Digital TV (DVB) will only work in countries or areas where DVB-T/DVB-T2*1 (MPEG-2 and H.264/MPEG-4 AVC) digital terrestrial signals are broadcast or where you have access to a compatible DVB-C (MPEG-2 and H.264/MPEG-4 AVC) cable service. Please confirm with your local dealer if you can receive a DVB-T/DVB-T2*1 signal where you live or ask your cable provider if their DVB-C cable service is suitable for integrated operation with this TV.
- Your cable provider may charge a fee for their services, or require you to agree to its terms and conditions of business.
- This TV set complies with DVB-T/DVB-T2*1 and DVB-C specifications, but compatibility with future DVB-T/DVB-T2*1 digital terrestrial and DVB-C digital cable broadcasts are not guaranteed.
- Some Digital TV functions may not be available in some countries/areas and DVB-C cable may not operate correctly with some providers.

✍
- Not all the HX TV model series have 2nd generation T2*1 Digital Video Broadcast technology.

*1 DVB-T2 is not available for TV model series HX850.
DVB-T2 is available for TV model series HX853.

✍
- The “x” that appears in the model name corresponds to a numeric digit, related to design, colour or TV system.
- Instructions about “Installing Wall Mount Bracket” are included within this TV’s instructions manual.
- The illustrations used in this manual may differ depending on your TV model.
- The illustrations of the remote used in this manual are of the RM-ED047 unless otherwise stated.
- Before operating the TV, please read page 28 (Safety Information). Retain this manual for future reference.

Trademark information

DVB is a registered trademark of the DVB Project.

HDMI, the HDMI Logo, and High-Definition Multimedia Interface are trademarks or registered trademarks of HDMI Licensing LLC in the United States and other countries.

DLNA®, the DLNA Logo and DLNA CERTIFIED® are trademarks, service marks, or certification marks of the Digital Living Network Alliance.

DivX®, DivX Certified® and associated logos are trademarks of Rovi Corporation or its subsidiaries and are used under license.

ABOUT DIVX VIDEO: DivX® is a digital video format created by DivX, LLC, a subsidiary of Rovi Corporation. This is an official DivX Certified® device that plays DivX video. Visit divx.com for more information and software tools to convert your files into DivX videos.

ABOUT DIVX VIDEO-ON-DEMAND: This DivX Certified® device must be registered in order to play purchased DivX Video-on-Demand (VOD) movies. To obtain your registration code, locate the DivX VOD section in your device setup menu. Go to vod.divx.com for more information on how to complete your registration.

Manufactured under license from Dolby Laboratories. Dolby and the double-D symbol are trademarks of Dolby Laboratories.

“BRAVIA” and BRAVIA are trademarks of Sony Corporation.

TrackID is a trademark or registered trademark of Sony Ericsson Mobile Communications AB.

Music and video recognition technology and related data are provided by Gracenote®. Gracenote is the industry standard in music recognition technology and related content delivery. For more information, please visit www.gracenote.com.
CD, DVD, Blu-ray Disc, and music and video-related data from Gracenote, Inc., copyright © 2000-present Gracenote. Gracenote Software, copyright © 2000-present Gracenote. One or more patents owned by Gracenote apply to this product and service. See the Gracenote website for a nonexhaustive list of applicable Gracenote patents. Gracenote, CDDB, MusicID, MediaVOCS, the Gracenote logo and logotype, and the "Powered by Gracenote" logo are either registered trademarks or trademarks of Gracenote in the United States and/or other countries.

Opera® Browser from Opera Software ASA. Copyright 1995-2012 Opera Software ASA. All rights reserved.

Wi-Fi Direct is a mark of the Wi-Fi Alliance.

"Blu-ray Disc", "Blu-ray" and "Blu-ray Disc" logo are trademarks of Blu-ray Disc Association.

"Sony Entertainment Network logo" and "Sony Entertainment Network" are trademarks of Sony Corporation.

Notice for Wireless Signal

1. Hereby, Sony Corporation declares that this unit is in compliance with the essential requirements and other relevant provisions of Directive 1999/5/EC.

For details, please access the following URL:

http://www.compliance.sony.de/

2. Notice for customers: the following information is only applicable to equipment sold in countries applying EU directives.

TV wireless system may be operated in following countries:

Austria, Belgium, Bulgaria, Cyprus, Czech Republic, Denmark, Estonia, Finland, France, Germany, Greece, Hungary, Iceland, Ireland, Italy, Latvia, Liechtenstein, Lithuania, Luxembourg, Malta, The Netherlands, Norway, Poland, Portugal, Slovak Republic, Romania, Slovenia, Spain, Sweden, Switzerland, Turkey, and The United Kingdom.

This equipment can be operated in other non-European countries.

TV Wireless System - Regulation Information

For Customers in Italy

Use of the RLAN network is governed: -

- with respect to private use, by the Legislative Decree of 1.8.2003, no. 259 ("Code of Electronic Communications"). In particular Article 104 indicates when the prior obtainment of a general authorization is required and Art. 105 indicates when free use is permitted;
- with respect to the supply to the public of the RLAN access to telecom networks and services, by the Ministerial Decree 28.5.2003, as amended, and Art. 25 (general authorization for electronic communications networks and services) of the Code of electronic communications

For Customers in Norway

Use of this radio equipment is not allowed in the geographical area within a radius of 20 km from the centre of Ny-Ålesund, Svalbard.

For Customers in Cyprus

The end user must register the RLAN (or WAS or WiFi) devices in the Department of Electronic Communications (P.I. 365/2008 and P.I. 267/2007).

P.I. 365/2008 is the Radiocommunications (Categories of Stations Subject to General Authorization and Registration) Order of 2008.

P.I. 267/2007 is the General Authorization for the use of Radiofrequencies by Radio Local area Networks and by Wireless Access Systems, including Radio Local Area Networks (WAS/RLAN).

For Customers in France

The WLAN (WiFi) feature of this LCD TV shall exclusively be used inside buildings. Any use of the WLAN (WiFi) feature of this LCD TV outside of the buildings is prohibited on the French territory. Please make sure that the WLAN (WiFi) feature of this LCD TV is disabled before any use outside of the buildings. (ART Decision 2002-1009 as amended by ART Decision 03-908, relating to radio-frequencies use restrictions).

Location of the identification label

Labels for Model No., Production Date (month/year) and Power Supply rating (in accordance with applicable safety regulation) are located on the rear of the TV or package.

About this manual
(Operating Instructions)

This manual explains how to set up your TV. For more information on how to use BRAVIA TV, refer to the “Electronic manual”.

Operating Instructions

Explains how to set up your TV such as connections, initial set-up, and basic operations.

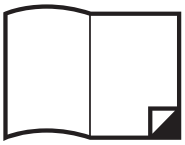

For more information, press the **i-MANUAL** button

Electronic manual
(i-Manual)

Explains how to use all the features. See page 19 on how to use the i-Manual.

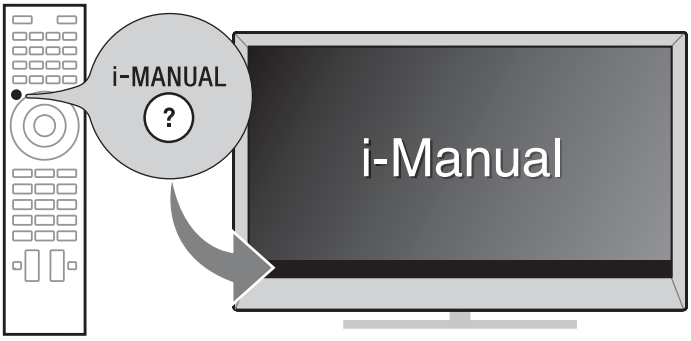

Images and illustrations used in this manual may differ from the actual screen.

Table of Contents

Getting Started

Checking the accessories 6
Inserting batteries into the remote 6
1: Attaching the TV Stand 7
2: Connections 9
3: Preventing the TV from toppling over 11
4: Bundling the cables 11
5: Connecting the TV to the Internet 12
6: Performing the initial set-up 13

Using Your BRAVIA TV

Watching TV ▶ 14

Selecting various functions and settings (Home Menu) 16
Watching Internet Video 18

Looking for Instructions

Looking for instructions in the electronic manual (i-Manual) ▶ 19

Additional Information

Troubleshooting 21
Specifications 22
Installing the Accessories (Wall-Mount Bracket) 24
Safety Information 28
Precautions 30

Checking the accessories

Remote (1)
Size AAA batteries (R03 type) (2)
TV Stand (1)
Joint (1)
Neck (1)
TV Stand Neck Attachment Screw (M5 × 16) (3)
Joint Screw (M5 × 16) (3)
Neck Screw (M5 × 16) (4)
Operating Instructions (this manual) and other documents

Inserting batteries into the remote

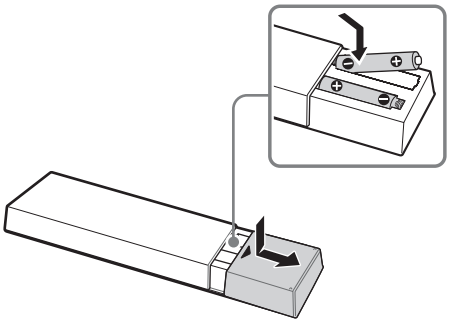

1 Remove the protection sheet.

2 Push and slide the cover to open.

1: Attaching the TV Stand

- Be sure to have a Phillips screwdriver that fits the screws prior to the assembly.

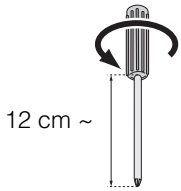

- If using an electric screwdriver, set the torque at approximately 1.5 N·m {15 kgf·cm}.

1 Attach the Neck to the TV Stand.

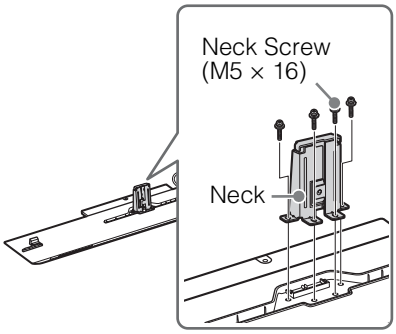

2 Prepare the TV.

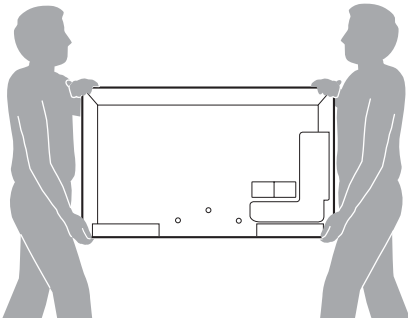

- When moving the TV, be sure that two or more persons install the TV on the TV Stand as shown in the illustration. If one person does the installation work alone, this may result in an accident or injury.

3 Attach the supplied Joint to the rear of the TV.
Slide the supplied Joint up to attach.

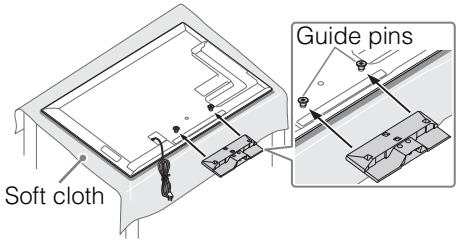

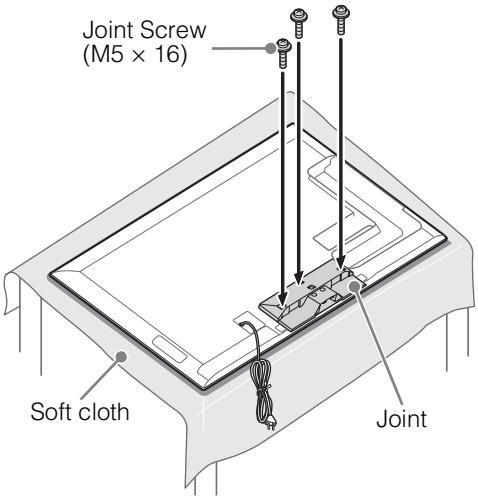

- Lay the display face down on a stable work surface that is larger than the display.
- To prevent damaging the surface of the LCD display, make sure to place a soft cloth on the work surface.

4 Install the TV onto the TV Stand.

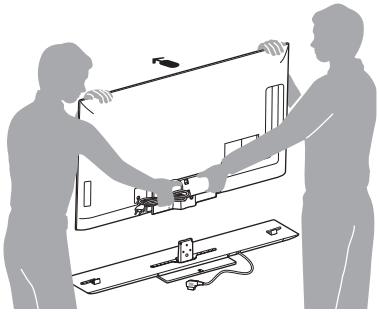

⬅ Arrow direction shows front of the TV Stand

(Continued)

✍
- When installing the TV on the TV Stand, hold the TV as shown in the illustration and install it on the two brackets of the TV Stand.
- Be careful not to pinch your hands or the AC power cord (mains lead) when you install the TV to the TV Stand.

5 Secure the TV and the TV Stand.

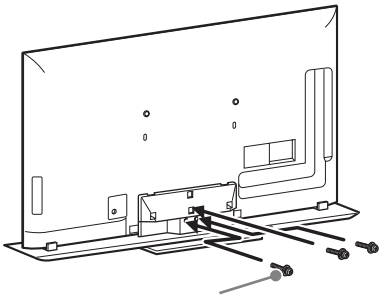

Detaching the TV Stand from the TV

To detach the TV Stand from the TV, remove the screws fixed in step 3 & 5.

✍
- Do not remove the TV Stand for any reason other than to install corresponding accessories on the TV.
- When removing the TV Stand from the TV, lay the display face down on a stable work surface that is larger than the TV.
- To prevent damaging the surface of the LCD display, make sure to place a soft cloth on the work surface.
- Be sure the TV is on the vertical position before switching on. TV set must not powered on with LCD panel face down to avoid uneven picture uniformity.

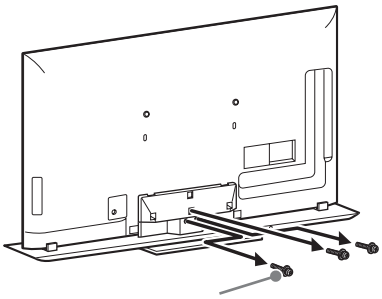

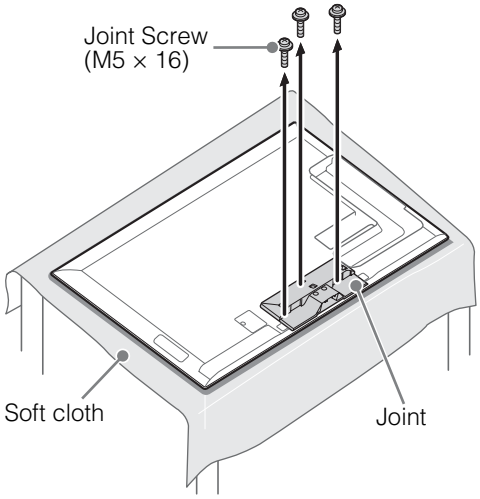

✍
- Ensure that there are no objects in front of the TV.

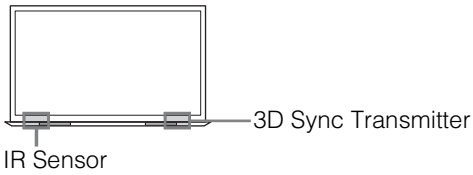

2: Connections

✍
- Use an antenna cable connector no greater than 14 mm in thickness.
- Use an HDMI cable connector within 12 mm (thickness) × 21 mm (width).

Connecting an antenna (aerial)/Set Top Box/ recorder (e.g. DVD recorder)

■ To connect a Set Top Box/recorder (e.g. DVD recorder) with SCART

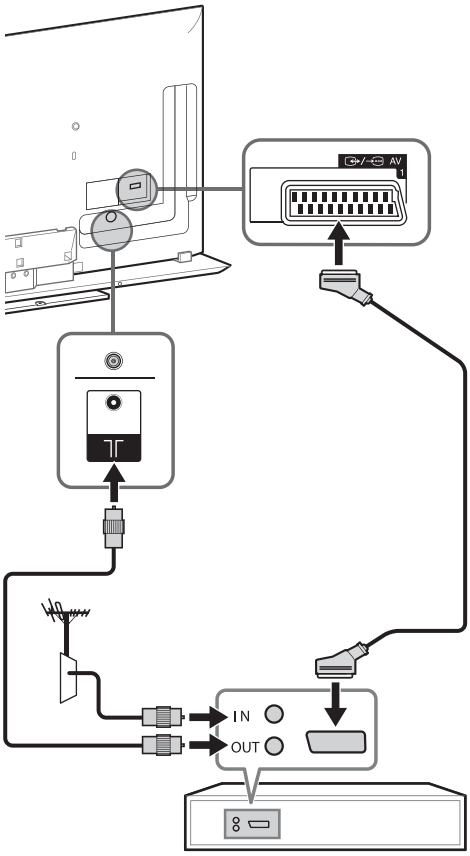

Set Top Box/recorder (e.g. DVD recorder)

✍
- Right Angle Type Universal SCART Lead is recommended for this connection.

■ To connect a Set Top Box/recorder (e.g. DVD recorder) with HDMI

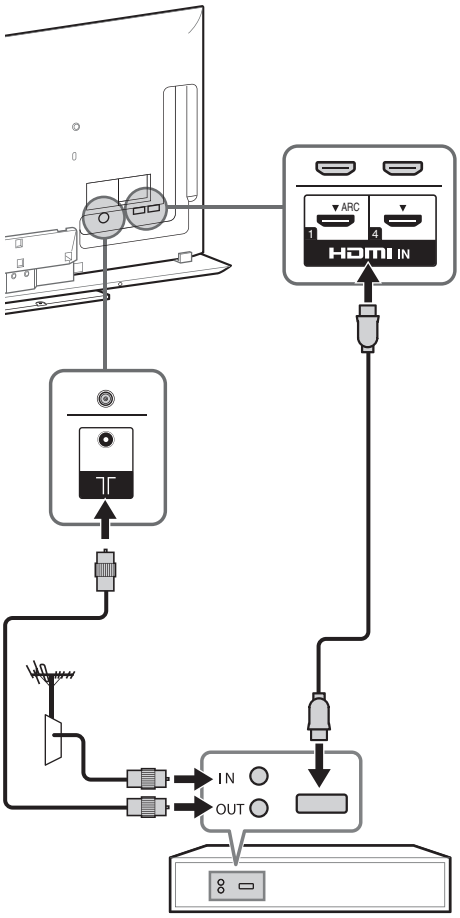

Set Top Box/recorder (e.g. DVD recorder)

(Continued)

Connecting audio/video devices

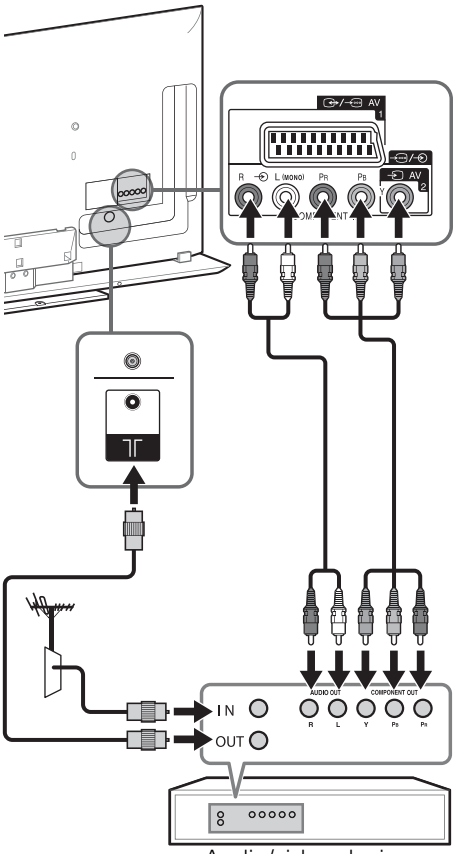

Audio/video device

Connecting the TV with a Speaker Integrated Stand to the TV Stand

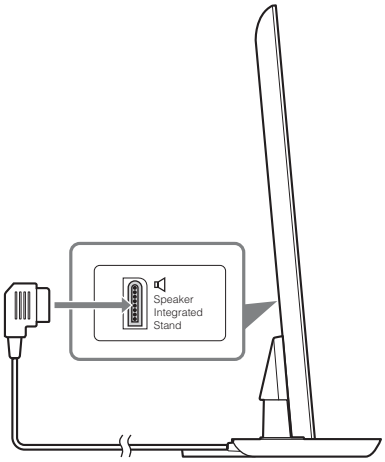

1 Connect the cable of the TV Stand to the Speaker Integrated Stand jack on the rear of the TV.

2 Set to “Speaker Integrated Stand” in “TV Position” menu. Press **HOME**, then select “Settings” → “Sound” → “TV Position” → “Speaker Integrated Stand”.

3: Preventing the TV from toppling over

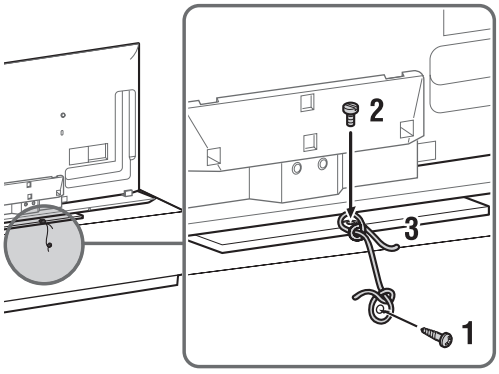

1 Install a wood screw (4 mm in diameter, not supplied) in the TV stand.

2 Install a machine screw (M4, not supplied) into the screw hole of the TV.

3 Tie the wood screw and the machine screw with a strong cord (not supplied).

The length of the M4 machine screw differs depending on the cord diameter. Please see below illustration.

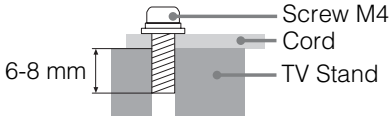

4: Bundling the cables

Before bundling the cables, remove the cable holder from the AC cover. Reuse the cable holder to bundle the other cables.

✍

- Do not bundle the AC power cord (mains lead) together with other cables.

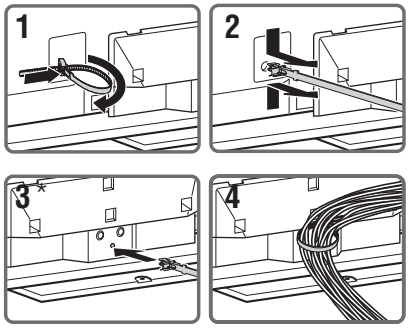

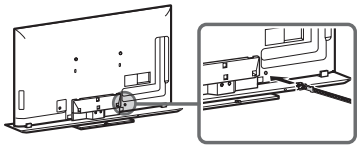

5: Connecting the TV to the Internet

When you connect this TV to the Internet, you can enjoy multiple functions: displaying a photograph that shows its location on the map, enjoying Internet video, etc. For details on the functions, refer to the i-Manual.

✍

- You will need to contract with an Internet service provider to connect to the Internet.

Preparing a wired network

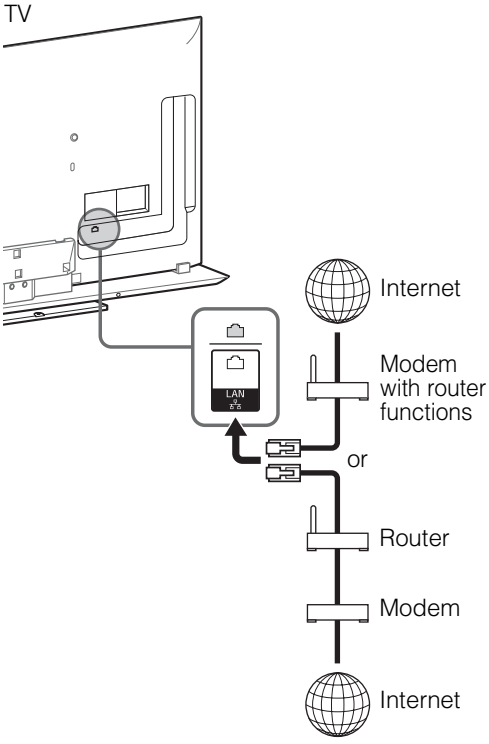

✍

- For LAN connections, use a Category 7 cable (not supplied).

Preparing a wireless LAN

The built-in wireless LAN device allows you to access the Internet and your home network. With this feature, you can connect to a wireless LAN and enjoy the benefits of networking in a cable-free environment. Before setting up the wireless LAN function of the TV, be sure to set up a wireless LAN router.

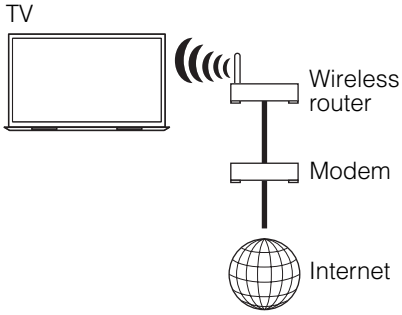

6: Performing the initial set-up

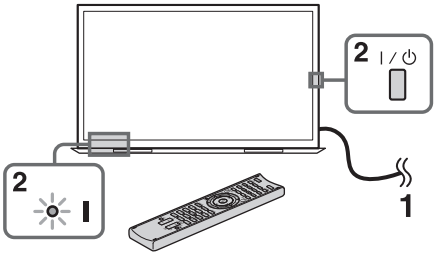

1 Connect the TV to your AC power outlet (mains socket).

2 Press I/⏻ on the TV. The I (power) indicator will light up in green.

When you switch on the TV for the first time, the Language menu appears on the screen.

✍
- When you turn on the TV for the first time, the TV requires some internal processing for optimisation before you can perform the initial setup. There will be no picture and sound, and the timer indicator on the front of the TV blinks orange for about 40 seconds. Do not turn off the TV during this process.
  This process has been completed at the factory for some TVs.

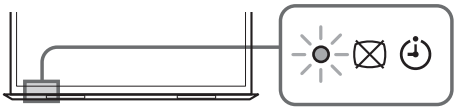

3 Press ⇧/⇩/⇦/⇨ to select an item, then press ⊕.

Follow the instructions on the screen.

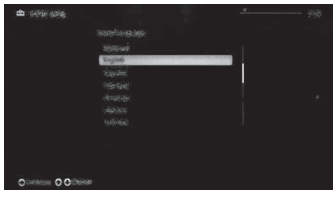

Digital Auto Tuning:
"Antenna" or "Cable":
Select "Antenna" to receive terrestrial TV broadcasting by an external antenna. Select "Cable" if you are a Cable TV subscriber not using an external Set-Top Box. When you select "Cable", we recommend that you select "Quick Scan" for quick tuning. Set "Frequency" and "Network ID" according to the information supplied from your cable provider. If no channel is found using "Quick Scan", try "Full Scan" (though it may take some time).

✍
- In some countries, you may select "Antenna" instead of "Cable" to receive Cable TV programmes.
- "Full Scan" may not be available depending on your region/country.

Programme Sorting: Changes the order of analogue channels stored in the TV.

❶ Press ⇧/⇩ to select the channel you want to move to a new position, then press ⊕.

❷ Press ⇧/⇩ to select the new position for the channel, then press ⊕.

✍
- You can also tune channels manually.

Network Set-up: Sets up the Internet settings. Select "Auto" to connect to the network automatically. Select "Custom" to connect manually.
If you do not access the Internet, or to set up later, select "Skip".

✍
- If you use WEP security, select "Custom" → "Wireless Set-up" → "Scan". Then, select the network name (SSID) you want to connect. If you cannot find the required network name, select "[Manual Entry]" and press ⊕ to enter network name.
- Use the optional USB Wireless LAN Adapter to connect with your wireless router (or access point) at 5GHz. Insert USB Wireless LAN Adapter and set "Standby for Wi-Fi Direct" to "Off". Press **HOME**, then select "Settings" → "Network" → "Standby for Wi-Fi Direct" → "Off".
- To set "Network Set-up" later, press **HOME**, then select "Settings" → "Network" → "Network Set-up".

Watching TV

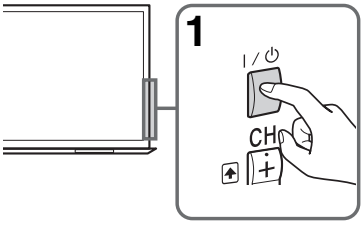

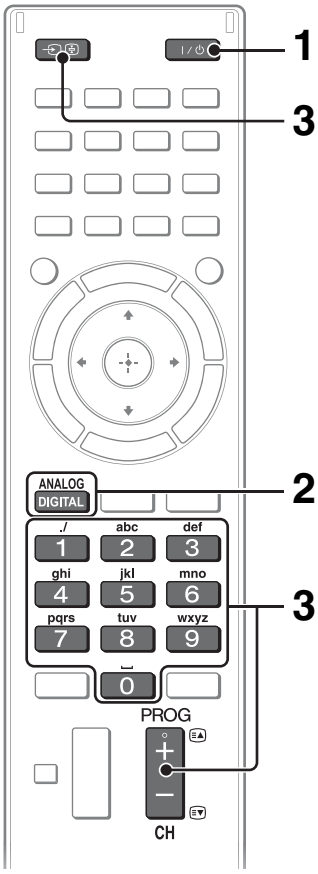

1 Turn on the TV.

Press I/⏻ on the TV or remote to turn on the TV.

2 Select a mode.

3 Select a TV channel or select an input.

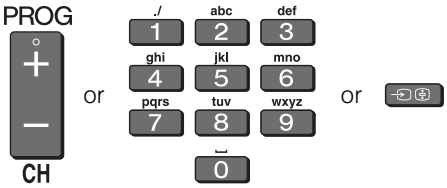

■ To select digital channels

Use **0-9**. For channel numbers 10 and above, press the next digit quickly.

Watching 3D contents

This feature lets you experience powerful 3D entertainment, such as stereoscopic 3D games and 3D Blu-ray Disc. Refer to the i-Manual as well as the instruction manual supplied with the 3D Glasses on how to set the 3D settings or watch the 3D contents.

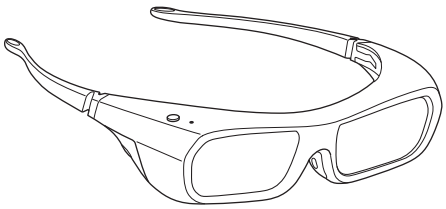

Frequently used buttons

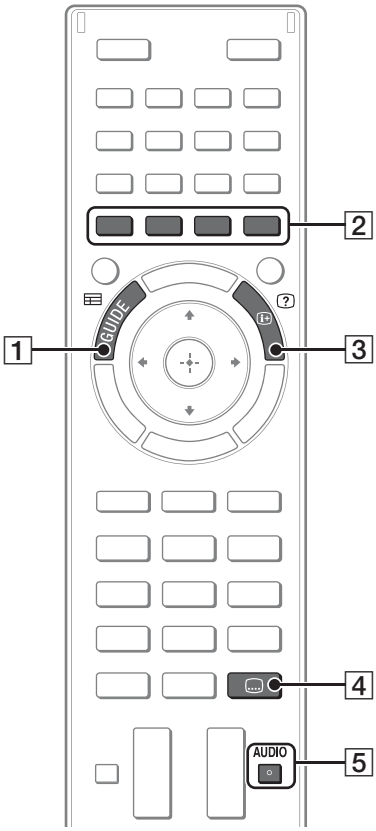

1 **GUIDE**
Displays the digital programme guide.

2 **Colour buttons**
When the colour buttons are available, an operation guide appears on the screen.

3 **/ Info/Text reveal**
Displays channel number, details of programmes, and the clock.

4 **Subtitle setting**
You can turn subtitles on/off while watching digital broadcasting.

5 **AUDIO**
You can select the sub sound or secondary language while watching multiplex broadcasts (digital broadcasts only).

Selecting various functions and settings (Home Menu)

You can select the features of your TV from the Home menu.

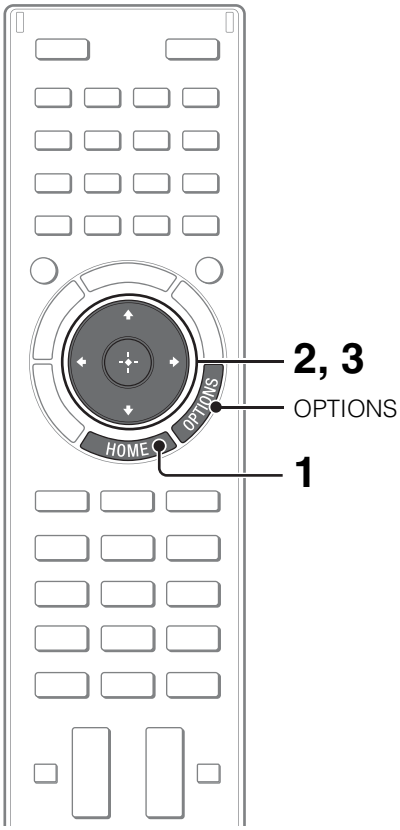

Here is an example on how to select an item and modify the TV settings.

1 Press HOME.

2 Press ⇦/⇨ to select (Settings) category.

The contents of “Settings” are displayed on the right.

See page 17 (Category list) for all categories.

3 Press ⇧/⇩ to select “Display”, then press ⊕.

4 Modify the settings.

■ To exit the Home menu

Press **HOME**.

■ To select using the OPTIONS button

Press **OPTIONS**.
A list of convenient functions and menu shortcuts are displayed. The menu items vary based on the current input and/or content.

Category list

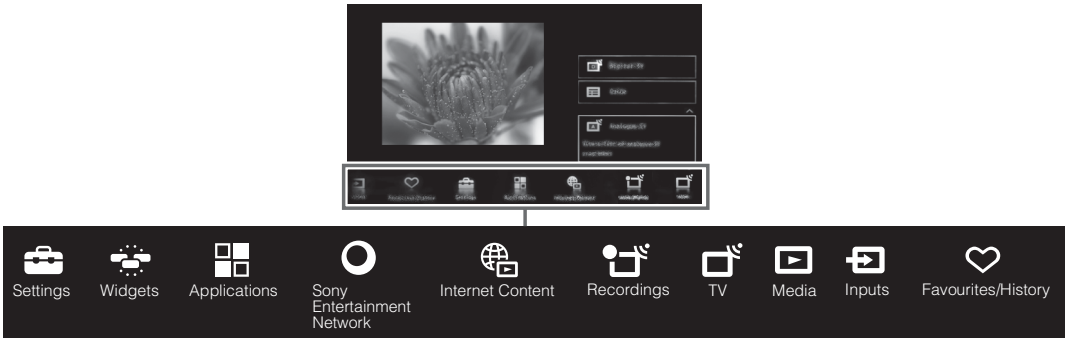

The categories are available depending on your region and country.

	Settings	Provides settings (e.g. picture settings, sound settings, key tone setting) that allow you to customise your TV.
	Widgets	Enables access to Widgets.
	Applications	Launches applications that require an Internet connection.
	Sony Entertainment Network	Enables selection of content from the online service “SEN” (Sony Entertainment Network).
	Internet Content	Enables access to Internet services for TV.
	Recordings	Enables timer recordings to a connected USB HDD device, and selection of recorded content to play.
	TV	Allows you to select a list of TV channels, or a programme guide.
	Media	Enables selection of media files (photo, music, video) to play in a connected USB storage device or your home network.
	Inputs	Enables selection of devices connected to the TV.
	Favourites/History	Displays items in Favourites and recently viewed items.

Watching Internet Video

This feature serves as a gateway to Internet content, delivering a variety of on-demand entertainment straight to your TV. You can enjoy video content, including movies and cartoons. You will need to make a broadband Internet connection. For details, see page 12 (5: Connecting the TV to the Internet).

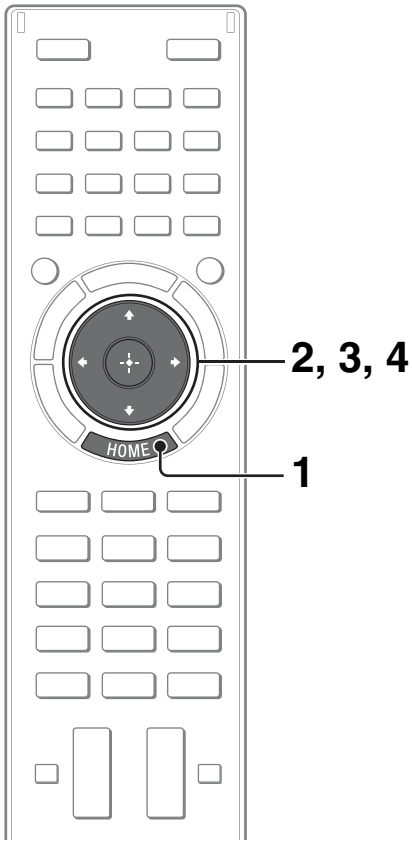

1 Press HOME.

2 Press ⇦/⇨ to select (Internet Content) category.

3 Press ⇧/⇩ to select "Internet Video", then press ⊕.

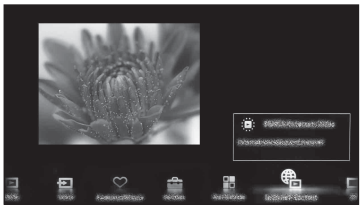

4 Press ⇧/⇩/⇦/⇨ to highlight the desired content, then press ⊕.

✍

- If you experience difficulties with this feature, check that the Internet connection is set up properly.
- The interface to Internet content depends on the Internet content providers.
- Services block video content based on the "Parental Lock" setting of the TV. Some service providers do not support this function.
- To update Internet Video content services, press **HOME**, then select "Settings" → "Network" → "Refresh Internet Content".

Looking for instructions in the electronic manual (i-Manual)

Operating instructions are built into your BRAVIA TV and can be displayed on the screen.
To learn more about your TV features, access your i-Manual with the touch of a button.

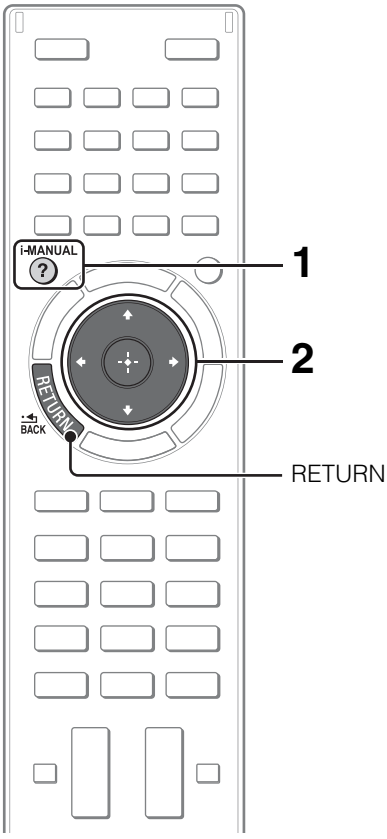

1 Press i-MANUAL.

2 Select an item.

❶ Press ⇦/⇨ to select an item.

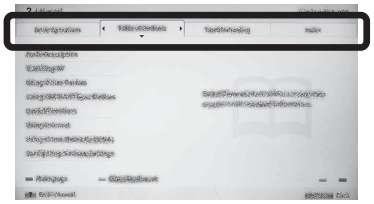

❷ Press ⇧/⇩/⇦/⇨ to select an item, then press ⊕.

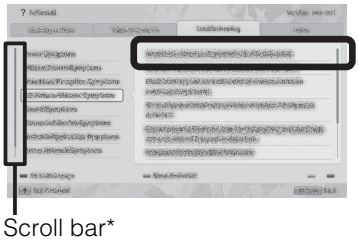

* If a scroll bar appears, press ⇩ repeatedly to display more items.

The page of the selected item appears.

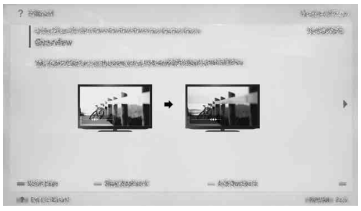

✍

- You can step through pages using ⇦/⇨.
  Press **RETURN** to return to the previous page.

(Continued)

Saving frequently viewed pages (Bookmark)

You can save frequently viewed pages for easy access anytime.

■ To save a page

In the page to bookmark, press the yellow button on the remote.

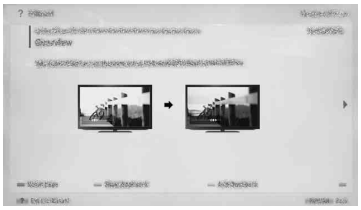

■ To access the bookmarked page

When displaying the i-Manual, press the green button on the remote to display the bookmark list. Press ⇧/⇩ to select the desired item, then press ⊕.

✍

- To return to the previous page, press ⇦.

■ To remove a bookmark

When the bookmarked page is displayed, press the yellow button on the remote.

Displaying the page again while operating the TV

You can switch between the i-Manual screen and the TV screen. This feature allows you to refer to the instructions in the i-Manual while using your BRAVIA TV. Press **i-MANUAL** to switch between the i-Manual screen previously displayed and the TV screen.

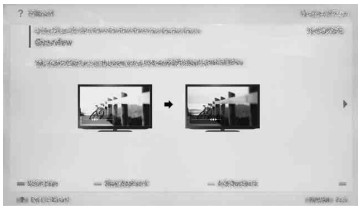

i-Manual screen previously displayed

BRAVIA TV screen

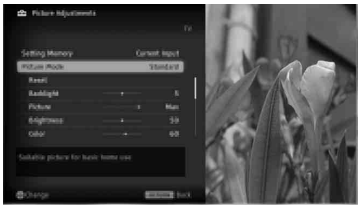

✍

- To jump to the top page of i-Manual, press the red button on the remote. You can also press **HOME**, then select “Settings” → “i-Manual” to jump to the top page of i-Manual.
- Once you turn off the TV or the TV goes to standby mode, the i-Manual will be displayed from the top page when you select “i-Manual”.

Troubleshooting

When the ⏻ (standby) indicator is flashing, count how many times it flashes (interval time is three seconds).

Press I/⏻ on the TV to turn it off, disconnect the AC power cord (mains lead), and inform your dealer or Sony service centre of how the indicator flashes (number of flashes).

When the ⏻ (standby) indicator is not flashing, check the items in the tables as follows.

Also refer to "Troubleshooting" in the i-Manual. If the problem persists, have your TV serviced by qualified service personnel.

Condition	Explanation/Solution
There is no picture (screen is dark) and no sound.	• Check the antenna (aerial)/cable connection. • Connect the TV to the AC power (mains), and press I/⏻ on the TV. • If the ⏻ (standby) indicator lights up in red, press I/⏻ on the remote.
Tiny black points and/or bright points appear on the screen.	• The screen is composed of pixels. Tiny black points and/or bright points (pixels) on the screen do not indicate a malfunction.
Some programmes cannot be tuned.	• Check the antenna (aerial) or dish.
There is no Cable TV services (programmes) found.	• Check the cable connection or tuning configuration. • Attempt the "Digital Auto Tuning" by selecting "Antenna" instead of "Cable".
The TV turns off automatically (the TV enters standby mode).	• Check if the "Sleep Timer" is activated, or confirm the "Duration" setting of "On Timer". • Check if the "Idle TV Standby" is activated.
The remote does not function.	• Replace the batteries. • Your TV may be in SYNC mode. Press **SYNC MENU**, select "TV Control" and then select "Home (Menu)" or "Options" to control the TV.
The "Parental Lock" password has been forgotten.	• Enter 9999 for the PIN code. (PIN code 9999 is always accepted.)
The TV surrounds become warm.	• When the TV is used for an extended period, the TV surrounds become warm. You may feel hot when touching there by the hand.

Specifications

System	
Panel system	LCD (Liquid Crystal Display) Panel
TV system	Analogue: Depending on your country/area selection: B/G/H, D/K, L, I, M Digital: DVB-T2 (KDL-55/46/40HX853 only) DVB-T/DVB-C
Colour/video system	Analogue: PAL, SECAM, NTSC3.58, NTSC4.43 Digital: MPEG-2 MP@HL/H14L/ML, AVC BP@L3/MP@L4/HP@L4 (30Mbps max, limited tool), MPEG-4 Visual SP@L6/ASP@L5/ACEP@L4
Channel coverage	Analogue: UHF/VHF/Cable, Depending on your country/area selection Digital: UHF/VHF/Cable, Depending on your country/area selection
Sound output	10 W +10 W +10 W
Input/Output jacks	
Antenna (aerial) cable	75 ohm external terminal for VHF/UHF
/AV1	21-pin scart connector (CENELEC standard) including audio/video input, RGB input and TV audio/video output.
/COMPONENT IN AV2	YPBPR (Component Video): 1080p (50, 60 Hz), 1080i (50, 60 Hz), 720p (50, 60 Hz), 576p, 576i, 480p, 480i Audio input (phono jacks) Video input (common phono pin with Y input)
HDMI IN 1, 2, 3, 4	Video (2D): 1080p (30, 50, 60 Hz), 1080/24p, 1080i (50, 60 Hz), 720p (30, 50, 60 Hz), 720/24p, 576p, 576i, 480p, 480i, PC Formats Video (3D): Frame Packing 1080p (30 Hz), 1080/24p, 1080i (50, 60 Hz), 720p (30, 50, 60 Hz), 720/24p Side-by-Side 1080p (50, 60 Hz), 1080/24p, 1080i (50, 60 Hz), 720p (50, 60 Hz) Over-Under 1080p (30, 50, 60 Hz), 1080/24p, 1080i (50, 60 Hz), 720p (50, 60 Hz) Audio: Two channel linear PCM: 32, 44.1 and 48 kHz, 16, 20 and 24 bits, Dolby Digital Analogue audio input (stereo minijack) (HDMI IN 2 only, common with PC IN) ARC (Audio Return Channel) (HDMI IN 1 only)
DIGITAL AUDIO OUT (OPTICAL)	Digital optical jack (Two channel linear PCM, Dolby Digital)
AUDIO OUT /	Audio output (stereo minijack) Headphones jack
Speaker Integrated Stand	Sound output for TV stand
PC IN PC / HDMI 2 AUDIO IN	Analog RGB (Mini D-sub 15-pin) Audio input (stereo minijack) (common with HDMI IN 2)
1, 2 (HDD REC)	USB port, USB HDD device port (2 only)
	CAM (Conditional Access Module) slot
LAN	10BASE-T/100BASE-TX connector (Depending on the operating environment of the network, connection speed may differ. 10BASE-T/100BASE-TX communication rate and communication quality are not guaranteed for this TV.)

Model name KDL-		55HX85x	46HX85x	40HX85x
Power and others				
Power requirements		220 V – 240 V AC, 50 Hz		
Energy Efficiency Class		A	A	B
Screen size (measured diagonally)		Approx. 138.8 cm/55 inches	Approx. 116.8 cm/46 inches	Approx. 101.6 cm/40 inches
Power consumption	in “Home”/ “Standard” mode	93.0 W	78.0 W	73.0 W
	in “Shop”/ “Vivid” mode	158 W	130 W	125 W
Average annual energy consumption*1		129 kWh	108 kWh	101 kWh
Standby power consumption*2		0.25 W (15 W in software / EPG update mode)	0.25 W (15 W in software / EPG update mode)	0.25 W (15 W in software / EPG update mode)
Display resolution		1,920 dots (horizontal) × 1,080 lines (vertical)		

Model name KDL-	55HX85x	46HX85x	40HX85x
Dimensions (Approx.) (w × h × d)			
with TV Stand	129.4 × 77.2 × 29.5 cm	109.7 × 66.3 × 25.5 cm	96.4 × 58.9 × 25.5 cm
without TV Stand	127.4 × 75.0 × 3.5 cm	107.7 × 64.0 × 3.5 cm	94.4 × 56.6 × 4.0 cm
Mass (Approx.)			
with TV Stand	27.9 kg	21.6 kg	18.5 kg
without TV Stand	21.7 kg	16.6 kg	13.7 kg
Supplied accessories	See page 6 (Checking the accessories).		
Optional accessories	Wall-Mount Bracket: SU-WL500 3D Glasses: TDG-BR750/TDG-BR250/TDG-BR200/TDG-BR100/TDG-BR50 Camera and Microphone Unit: CMU-BR100 USB Wireless LAN Adapter: UWA-BR100		
Operating temperature	0 °C - 40 °C		
Operating humidity	10% - 80% RH (non-condensing)		

*1 Energy consumption per year, based on the power consumption of the television operating 4 hours per day for 365 days. The actual energy consumption will depend on how the television is used.
*2 Specified standby power is reached after the TV finishes necessary internal processes.

Optional accessories availability depends on countries/region/TV model/stock.
Design and specifications are subject to change without notice.

Installing the Accessories (Wall-Mount Bracket)

■ To Customers:

For product protection and safety reasons, Sony strongly recommends that installing of your TV be performed by Sony dealers or licensed contractors. Do not attempt to install it yourself.

■ To Sony Dealers and Contractors:

Provide full attention to safety during the installation, periodic maintenance and examination of this product.

Your TV can be installed using the SU-WL500 (page 25) Wall-Mount Bracket (sold separately).

- Refer to the Instructions supplied with the Wall-Mount Bracket to properly carry out the installation.
- See page 8 (Detaching the TV Stand from the TV).

Sufficient expertise is required for installing this product, especially to determine the strength of the wall for withstanding the TV's weight. Be sure to entrust the attachment of this product to the wall to Sony dealers or licensed contractors and pay adequate attention to safety during the installation. Sony is not liable for any damage or injury caused by mishandling or improper installation.

SU-WL500

When installing the TV on the wall, remove the screws from the rear of the TV. Be sure to store the removed screws in a safe place, keeping them away from children.

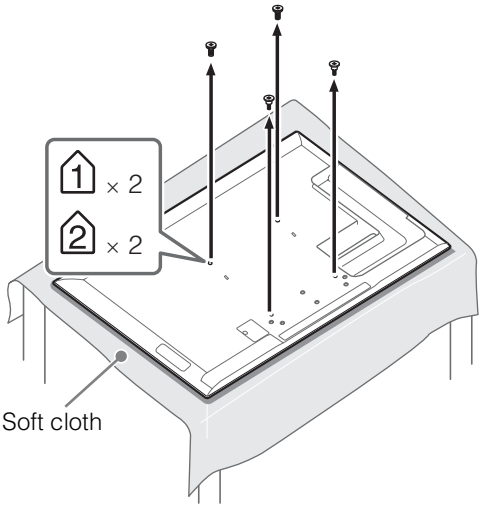

✍

- When removing the TV Stand from the TV, lay the display face down on a stable work surface that is larger than the TV.
- To prevent damaging the surface of the LCD display, make sure to place a soft cloth on the work surface.

SU-WL500

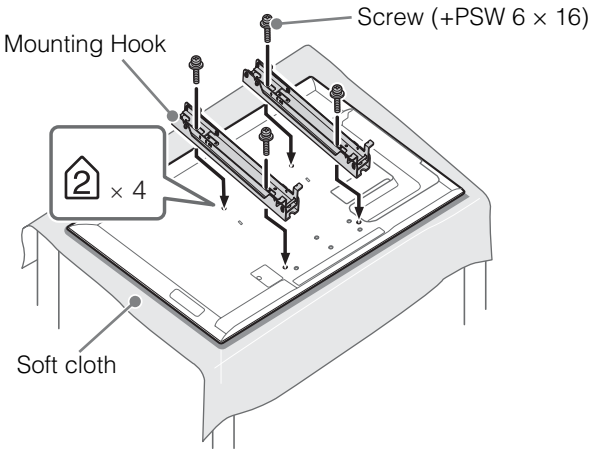

✍

- Attach the Mounting Hook using the four screws supplied with the Wall-Mount Bracket.
- When attaching the TV Stand again, be sure to fasten the screws (previously removed) to the original holes on the rear of the TV.

(Continued)

Screw and Hook locations diagram/table

Model Name KDL-	Screw location	Hook location
	SU-WL500	SU-WL500
55HX85x	e, j	b
46HX85x		
40HX85x		

■ SU-WL500

Screw location

When installing the Mounting Hook on the TV.

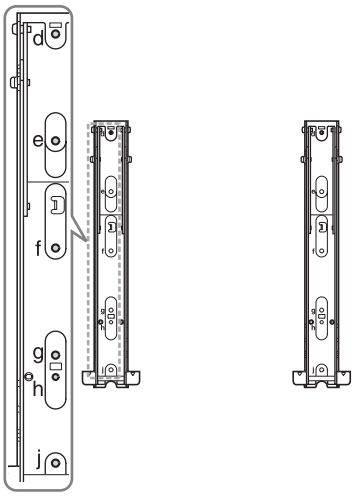

Hook location

When installing the TV onto the Base Bracket.

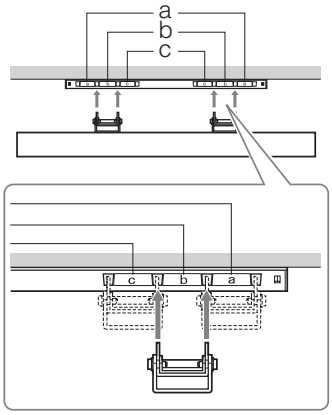

TV installation dimensions table

SU-WL500

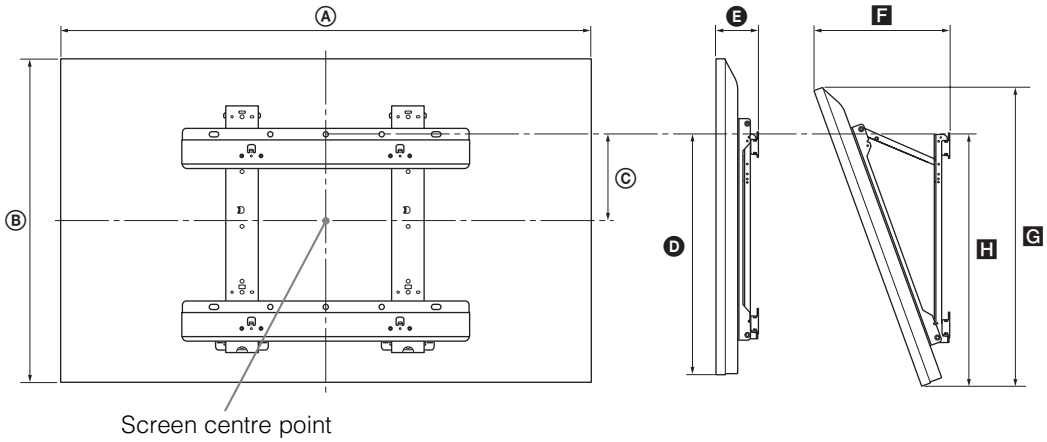

Unit: cm

Model Name KDL-	Display dimensions		Screen centre dimension	Length for each mounting angle				
				Angle (0°)		Angle (20°)		
	A	B	C	D	E	F	G	H
55HX85x	127.4	75.0	7.8	45.9	9.3	31.9	70.5	47.4
46HX85x	107.7	64.0	13.3	45.9	9.3	28.2	60.2	47.4
40HX85x	94.4	56.6	17.0	45.9	9.8	26.2	53.2	47.6

Figures in the table may differ slightly depending on the installation.

WARNING

The wall that the TV will be installed should be capable of supporting a weight of at least four times that of the TV. See page 22-23 (Specifications) for its weight.

Safety Information

WARNING

Batteries must not be exposed to excessive heat such as sunshine, fire or the like.

Installation/Set-up

Install and use the TV set in accordance with the instructions as follows in order to avoid any risk of fire, electrical shock or damage and/or injuries.

Installation

- The TV set should be installed near an easily accessible mains socket.
- Place the TV set on a stable, level surface.
- Only qualified service personnel should carry out wall installations.
- For safety reasons, it is strongly recommended that you use Sony accessories, including:
  – Wall-Mount Bracket: SU-WL500
- Be sure to use the screws supplied with the Wall-mount bracket when attaching the mounting hooks to the TV set. The supplied screws are designed so that they are 8 mm to 12 mm in length when measured from the attaching surface of the mounting hook.
  The diameter and length of the screws differ depending on the Wall-mount bracket model.
  Use of screws other than those supplied may result in internal damage to the TV set or cause it to fall, etc.

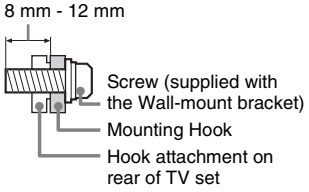

Transporting

- Before transporting the TV set, disconnect all cables.
- Two or three people are needed to transport a large TV set.
- When transporting the TV set by hand, hold it as shown in the illustration. Do not put stress on the LCD panel and the frame around the screen.

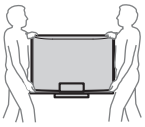

- When transporting the TV set, do not subject it to jolts or excessive vibration.
- When transporting the TV set for repairs or when moving, pack it using the original carton and packing material.

Ventilation

- Never cover the ventilation holes or insert anything in the cabinet.
- Leave space around the TV set as shown below.
- It is strongly recommended that you use a Sony wall-mount bracket in order to provide adequate air-circulation.

Installed on the wall

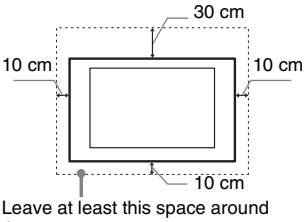

Leave at least this space around the set.

Installed with stand

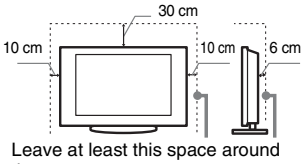

Leave at least this space around the set.

- To ensure proper ventilation and prevent the collection of dirt or dust:
  – Do not lay the TV set flat, install upside down, backwards, or sideways.
  – Do not place the TV set on a shelf, rug, bed or in a closet.
  – Do not cover the TV set with a cloth, such as curtains, or items such as newspapers, etc.
  – Do not install the TV set as shown below.

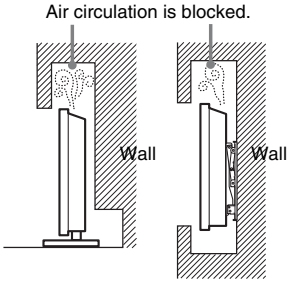

Mains lead

Handle the mains lead and socket as follows in order to avoid any risk of fire, electrical shock or damage and/or injuries:

– Use only mains leads supplied by Sony, not other suppliers.
– Insert the plug fully into the mains socket.
– Operate the TV set on a 220-240 V AC supply only.
– When wiring cables, be sure to unplug the mains lead for your safety and take care not to catch your feet on the cables.
– Disconnect the mains lead from the mains socket before working on or moving the TV set.
– Keep the mains lead away from heat sources.
– Unplug the mains plug and clean it regularly. If the plug is covered with dust and it picks up moisture, its insulation may deteriorate, which could result in a fire.

Notes

- Do not use the supplied mains lead on any other equipment.
- Do not pinch, bend, or twist the mains lead excessively. The core conductors may be exposed or broken.
- Do not modify the mains lead.
- Do not put anything heavy on the mains lead.
- Do not pull on the mains lead itself when disconnecting the mains lead.
- Do not connect too many appliances to the same mains socket.
- Do not use a poor fitting mains socket.

Prohibited Usage

Do not install/use the TV set in locations, environments or situations such as those listed below, or the TV set may malfunction and cause a fire, electrical shock, damage and/or injuries.

Location:

- Outdoors (in direct sunlight), at the seashore, on a ship or other vessel, inside a vehicle, in medical institutions, unstable locations, near water, rain, moisture or smoke.
- If the TV is placed in the changing room of a public bath or hot spring, the TV may be damaged by airborne sulfur, etc.

- For best picture quality, do not expose the screen to direct illumination or sunlight.
- Avoid moving the TV from a cold area to a warm area. Sudden room temperature changes may cause moisture condensation. This may cause the TV to show poor picture and/or poor colour. Should this occur, allow moisture to evaporate completely before powering the TV on.
- Never spray water or detergent directly on the TV set. It may drip to the bottom of the screen or exterior parts and enter the TV set, and may cause damage to the TV set.

Environment:

- Places that are hot, humid, or excessively dusty; where insects may enter; where it might be exposed to mechanical vibration, near flammable objects (candles, etc). The TV set shall not be exposed to dripping or splashing and no objects filled with liquids, such as vases, shall be placed on the TV.
- Do not place the TV in a humid or dusty space, or in a room with oily smoke or steam (near cooking tables or humidifiers). Fire, electric shock, or warping may result.

- Do not install the TV in places subject to extreme temperature such as in direct sunlight, near a radiator or a heating vent. The TV may overheat in such condition which can cause deformation of the enclosure and/or TV malfunction.

Situation:

- Do not use when your hands are wet, with the cabinet removed, or with attachments not recommended by the manufacturer. Disconnect the TV set from mains socket and aerial during lightning storms.
- Do not install the TV so that it sticks out into an open space. Injury or damage from a person or object bumping into the TV may result.

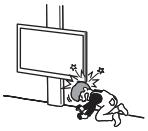

Broken pieces:

- Do not throw anything at the TV set. The screen glass may break by the impact and cause serious injury.
- If the surface of the TV set cracks, do not touch it until you have unplugged the mains lead. Otherwise electric shock may result.

When not in use

- If you will not be using the TV set for several days, the TV set should be disconnected from the mains for environmental and safety reasons.
- As the TV set is not disconnected from the mains when the TV set is just turned off, pull the plug from the mains to disconnect the TV set completely.
- However, some TV sets may have features that require the TV set to be left in standby to work correctly.

For children

- Do not allow children to climb on the TV set.
- Keep small accessories out of the reach of children, so that they are not mistakenly swallowed.

If the following problems occur...

Turn off the TV set and unplug the mains lead immediately if any of the following problems occur.

Ask your dealer or Sony service centre to have it checked by qualified service personnel.

When:

– Mains lead is damaged.
– Poor fitting of mains socket.
– TV set is damaged by being dropped, hit or having something thrown at it.
– Any liquid or solid object falls through openings in the cabinet.

Warning

To prevent the spread of fire, keep candles or other open flames away from this product at all time.

About LCD Monitor Temperature

When the LCD Monitor is used for an extended period, the panel surrounds become warm. You may feel hot when touching there by the hand.

Precautions

Viewing the TV

- Some people may experience discomfort (such as eye strain, fatigue, or nausea) while watching 3D video images or playing stereoscopic 3D games. Sony recommends that all viewers take regular breaks while watching 3D video images or playing stereoscopic 3D games. The length and frequency of necessary breaks will vary from person to person. You must decide what works best. If you experience any discomfort, you should stop watching the 3D video images or playing stereoscopic 3D games until the discomfort ends; consult a doctor if you believe necessary. You should also review (i) the instruction manual of any other device or media used with this television and (ii) our website (http://www.sony-europe.com/myproduct) for the latest information. The vision of young children (especially those under six years old) is still under development. Consult your doctor (such as a pediatrician or eye doctor) before allowing young children to watch 3D video images or play stereoscopic 3D games. Adults should supervise young children to ensure they follow the recommendations listed above.
- Do not use, store, or leave the 3D Glasses or battery near fire, or in places with a high temperature, e.g., in direct sunlight, or in sun-heated cars.
- When using the simulated 3D function, please note that the displayed image is modified from the original due to the conversion done by this television.
- View the TV in moderate light, as viewing the TV in poor light or during long period of time, strains your eyes.
- When using headphones, adjust the volume so as to avoid excessive levels, as hearing damage may result.

LCD Screen

- Although the LCD screen is made with high-precision technology and 99.99% or more of the pixels are effective, black dots may appear or bright points of light (red, blue, or green) may appear constantly on the LCD screen. This is a structural property of the LCD screen and is not a malfunction.
- Do not push or scratch the front filter, or place objects on top of this TV set. The image may be uneven or the LCD screen may be damaged.
- If this TV set is used in a cold place, a smear may occur in the picture or the picture may become dark. This does not indicate a failure. These phenomena disappear as the temperature rises.
- Ghosting may occur when still pictures are displayed continuously. It may disappear after a few moments.
- The screen and cabinet get warm when this TV set is in use. This is not a malfunction.
- The LCD screen contains a small amount of liquid crystal. Follow your local ordinances and regulations for disposal.
- Do not subject the LCD screen to any strong impact or shock. The screen glass may crack or shatter and cause injury.

Handling and cleaning the screen surface/ cabinet of the TV set

Be sure to unplug the mains lead connected to the TV set from mains socket before cleaning.

To avoid material degradation or screen coating degradation, observe the following precautions.

- To remove dust from the screen surface/cabinet, wipe gently with a soft cloth. If dust is persistent, wipe with a soft cloth slightly moistened with a diluted mild detergent solution.
- Never spray water or detergent directly on the TV set. It may drip to the bottom of the screen or exterior parts and enter the TV set, and may cause damage to the TV set.

- Never use any type of abrasive pad, alkaline/acid cleaner, scouring powder, or volatile solvent, such as alcohol, benzene, thinner or insecticide. Using such materials or maintaining prolonged contact with rubber or vinyl materials may result in damage to the screen surface and cabinet material.
- Periodic vacuuming of the ventilation openings is recommended to ensure to proper ventilation.
- When adjusting the angle of the TV set, move it slowly so as to prevent the TV set from moving or slipping off from its table stand.

Optional Equipment

- Keep optional components or any equipment emitting electromagnetic radiation away from the TV set. Otherwise picture distortion and/or noisy sound may occur.
- This equipment has been tested and found to comply with the limits set out in the EMC Directive using a connection signal cable shorter than 3 meters.

(Caution about handling the remote control) Notes

- Observe the correct polarity when inserting batteries.
- Do not use different types of batteries together or mix old and new batteries.
- Dispose of batteries in an environmentally friendly way. Certain regions may regulate the disposal of batteries. Please consult your local authority.
- Handle the remote with care. Do not drop or step on it, or spill liquid of any kind onto it.
- Do not place the remote in a location near a heat source, a place subject to direct sunlight, or a damp room.

Wireless Function of the unit

- Do not operate this unit near medical equipment (pacemaker, etc.), as malfunction of the medical equipment may result.
- Although this unit transmits/receives scrambled signals, be careful of unauthorised interception. We cannot be responsible for any trouble as a result.

Disposal of the TV set

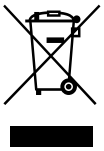

Disposal of Old Electrical & Electronic Equipment (Applicable in the European Union and other European countries with separate collection systems)

This symbol on the product or on its packaging indicates that this product shall not be treated as household waste. Instead it shall be handed over to the applicable collection point for the recycling of electrical and electronic equipment. By ensuring this product is disposed of correctly, you will help prevent potential negative consequences for the environment and human health, which could otherwise be caused by inappropriate waste handling of this product. The recycling of materials will help to conserve natural resources. For more detailed information about recycling of this product, please contact your local Civic Office, your household waste disposal service or the shop where you purchased the product.

Disposal of waste batteries (applicable in the European Union and other European countries with separate collection systems)

This symbol on the battery or on the packaging indicates that the battery provided with this product shall not be treated as household waste. On certain batteries this symbol might be used in combination with a chemical symbol. The chemical symbols for mercury (Hg) or lead (Pb) are added if the battery contains more than 0.0005% mercury or 0.004% lead. By ensuring these batteries are disposed of correctly, you will help prevent potentially negative consequences for the environment and human health which could otherwise be caused by inappropriate waste handling of the battery. The recycling of the materials will help to conserve natural resources. In case of products that for safety, performance or data integrity reasons require a permanent connection with an incorporated battery, this battery should be replaced by qualified service staff only. To ensure that the battery will be treated properly, hand over the product at end-of-life to the applicable collection point for the recycling of electrical and electronic equipment. For all other batteries, please view the section on how to remove the battery from the product safely. Hand the battery over to the applicable collection point for the recycling of waste batteries. For more detailed information about recycling of this product or battery, please contact your local Civic Office, your household waste disposal service or the shop where you purchased the product.

Keep this important information about how to re-tune your TV during the digital TV switchover

Keep this Instruction manual safe you'll need it

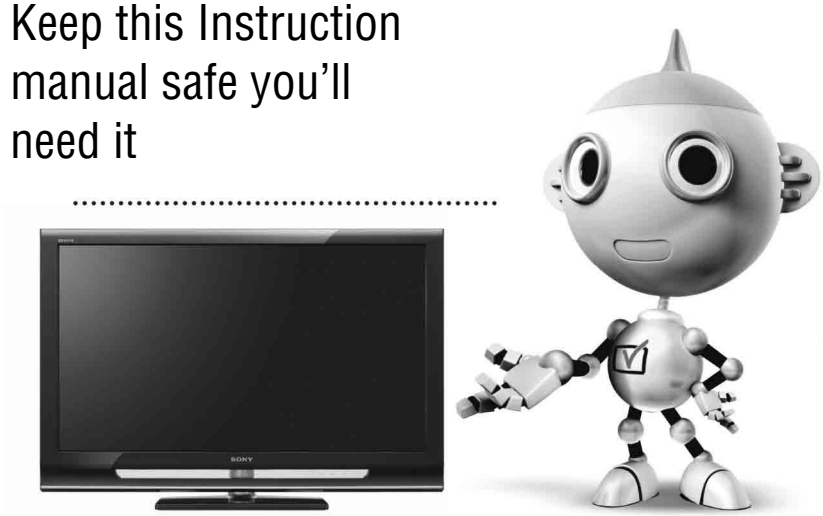

Television in the UK is going digital, bringing us all more.
Please see overleaf to find out when your area switches to digital.
Digital UK is the independent, non-profit organisation leading the process of digital TV switchover in the UK. Digital UK provides impartial information on what people need to do to prepare for the move to digital, and when they need to do it.

How the switchover affects your TV equipment:

Your new TV has a digital tuner built in, which means it is ready to receive the Freeview signal by simply plugging it into your aerial socket (check if you can get digital TV through your aerial now, or whether you'll have to wait until switchover, at **www.digitaluk.co.uk**).

When the TV switchover happens in your area, there are at least two occasions when you will need to re-tune your TV in order to continue receiving your existing TV channels, and also to pick up new ones. Digital UK, the body leading the digital TV switchover, will advise you when you need to re-tune during the switchover.

How to re-tune:

1 Press "**HOME**" on the remote

2 Press ⇦/⇨ to select "Settings"

3 Press ⇧/⇩ to select "Digital Set-up", then press ⊕

4 Press ⊕ to select "Digital Auto Tuning"

5 Press ⇦ to select "Yes" then press ⊕ to start "Digital Auto Tuning"

6 Follow the on screen instructions.

If you are missing any channels, it may be that they are not available in your area, or that your aerial needs upgrading.

If you have any questions, please contact Sony on **0844 8466555** or call Digital UK on **0845 6 50 50 50** or visit **www.digitaluk.co.uk**

Visit us at **digitaluk.co.uk** call us on **0845 6 50 50 50†**

†Calls charged at BT rate of 3p per minute daytime and 1p per minute evenings and weekends. Rates may vary for calls from non-BT lines.

For useful information about Sony products

http://www.sony-europe.com/myproduct/

4411997111

4-411-997-**11**(1)

http://www.sony.net/

© 2012 Sony Corporation